Modelithics®
World's Best RF & Microwave Simulation Models

3D Brick Models for EM Co-simulation of Capacitors

Isabella Bedford, RF Engineer

Over 20 Years of Precision Measurements and Modeling Excellence!

Agenda

- Why use 3D Models?
- Advantages and Difficulties in 3D Modeling
- Modelithics COMPLETE+3D Library
- 3D Model Encryption
- What are 3D Brick Models™?
- 3D Brick Model Application Example
- How to Use 3D Brick Models
- Advantages of 3D Brick Models
- Conclusion

About Modelithics

- Modelithics is the **industry leader** in providing highly accurate, unique premium passive and active RF & microwave circuit simulation models.
- We enable designers to go from concept to product **faster and easier**.
- We have developed an **excellent reputation** for measurement-based highly scalable equivalent circuit model. Modelithics also offers advanced microwave and mm-wave measurement services for passive and active electronic devices over broad frequency ranges.
- Today we will discuss a different type of model, based on physical dimensions, material properties and Maxwell's Equations and integrated into powerful **3D EM simulators** such as Ansys HFSS and others.

Meeting the evolving needs of design engineers, Modelithics offers 3D EM Modeling Services and 3D Models for Ansys HFSS

Why 3D EM Modeling?

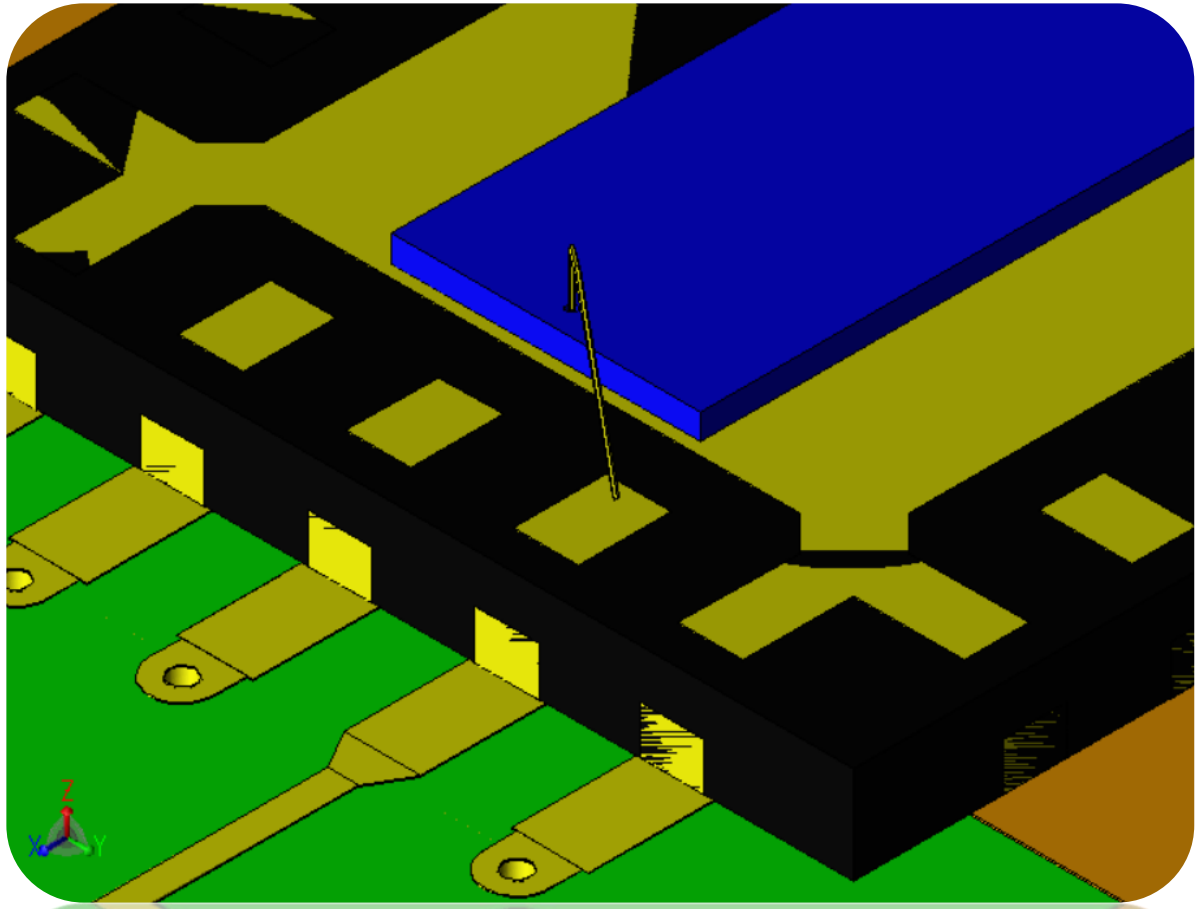

- **Circuit models** are powerful tools but do not take into account EM interactions between components.
- **3D models** are physics-based models used in 3D simulators to allow EM interactions to be accounted for but require longer simulation times for the designer as well as manufacturer proprietary information to create.
- **3D Brick Models™** are stand-in components for capacitors in the 3D EM simulation that allow the designer to capture EM interactions while allowing more flexibility and faster simulations.

Why Use 3D EM Models?

- Needed to capture EM interactions (coupling, shielding, packaging effects, etc.)
- Example 3D simulation result shown to the right
  - Shunt configuration of 3 capacitors on 50 Ohm transmission line
  - Spacing between components varied 1-5 substrate thicknesses
  - E-Field Magnitude shown

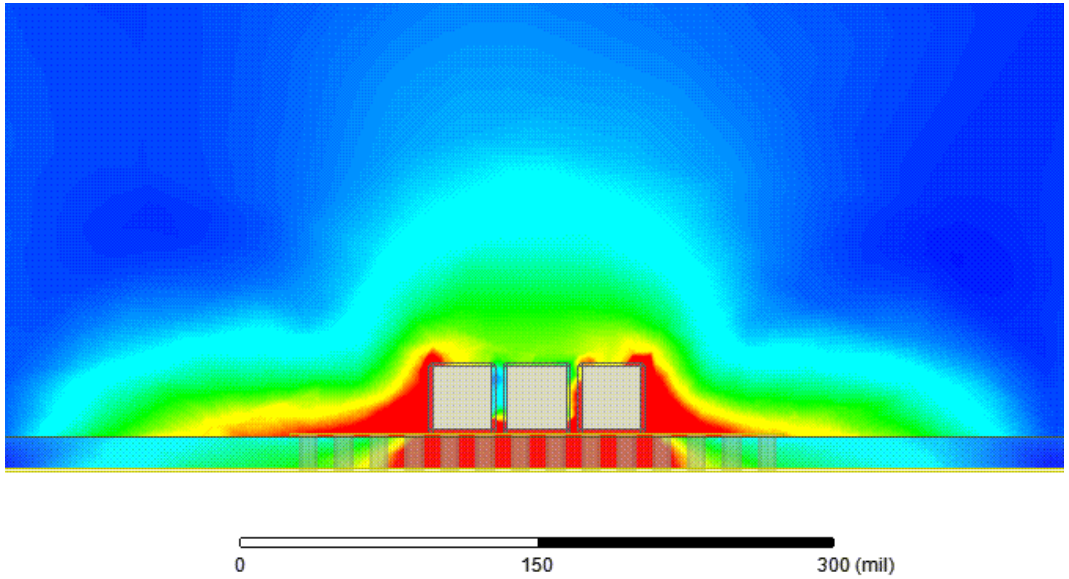

3D simulators allows post-production field plots to be created, however plotted regions within an encrypted component will appear as white space (unselected) zones.

Advantages of 3D Modeling

- Challenging design constraints require physics-based models
- 3D EM analysis offers designers insight into coupling and component interactions
- Increases customer first-pass design success with accurate performance prediction

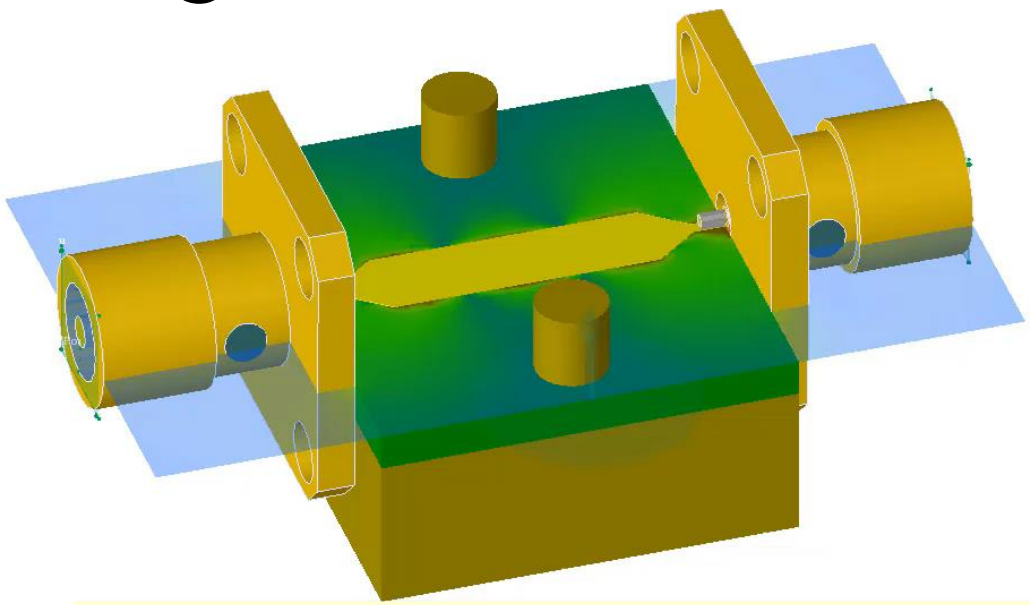

Modelithics 3D Geometry Models

- **Substrate Independent**
- **Encrypted and 3D EM Simulation compatible**
- **Predict Coupling and Shielding Effects**

Difficulties in 3D Component Modeling

- 3D EM analysis is a proven method leading to excellent results. However, obtaining the necessary physical/material details can be challenging.
  - **One of Modelithics' value adds is our relationships of trust with component manufacturers. Under NDA, our partners share this information with Modelithics. Encryption technology allows us to build 3D models and distribute them with the Modelithics COMPLETE+3D Library while protecting IP.**
- Even with all the internal details, 3D model creation is complex. Measurement validation and EM simulation expertise is crucial.
  - In addition to extensive EM simulation experience, Modelithics has a large database of measurements needed for validations and can obtain new measurements quickly.
- Although 3D models are validated under specific conditions, the resulting model is much more general than equivalent circuit models and enables the designer to capture component and environmental interactions.

Modelithics COMPLETE+3D Library

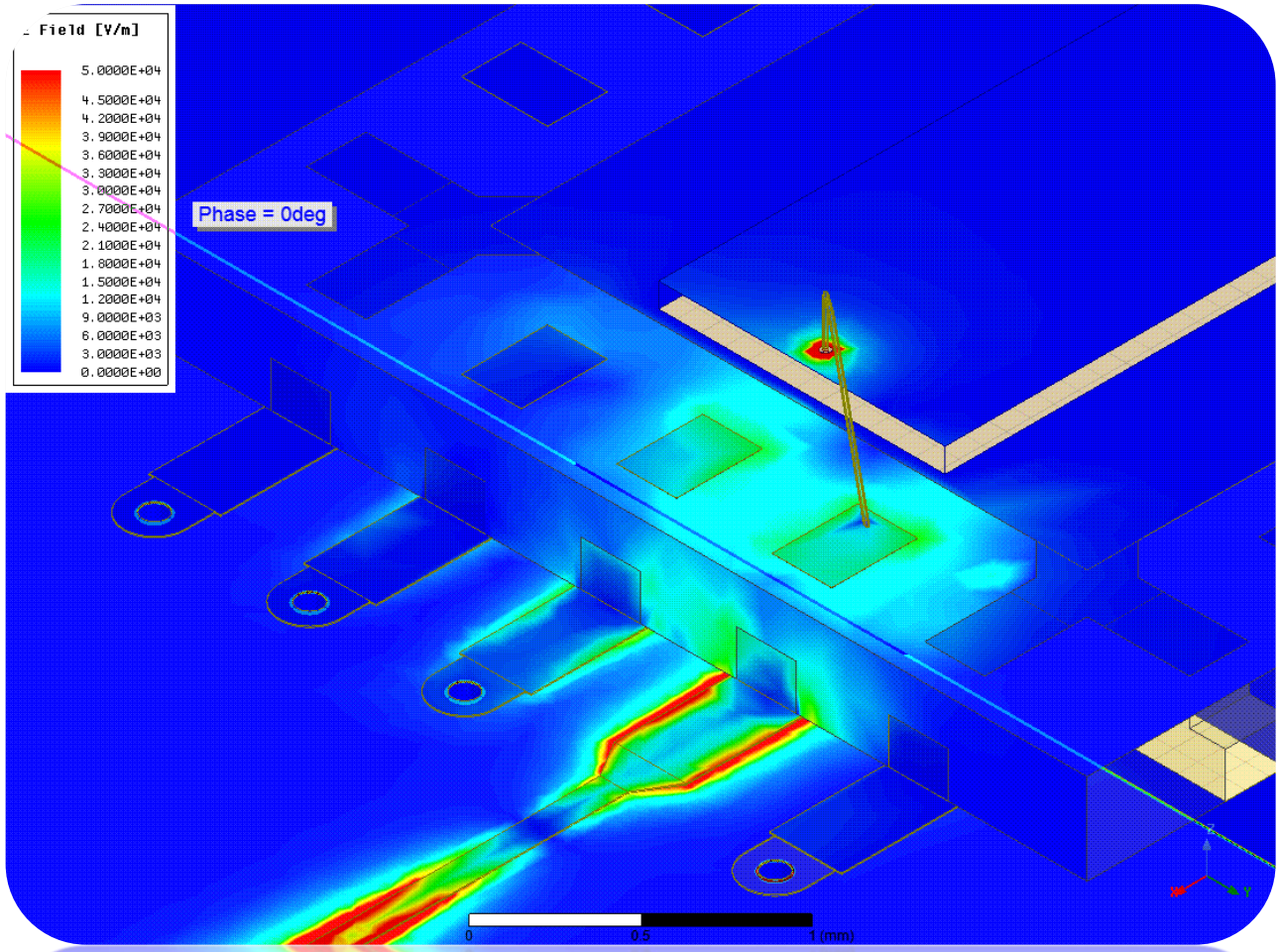

Modelithics current 3D model offering includes over 500 3D Geometry models as well as Modelithics collection of CLR component models.

V22.0

All Models Are:

- Based on physical dimensions and material properties
- Encrypted to protect vendor IP
- Measurement validated
- Documented with a model information data sheet

New Developments in 3D Modeling

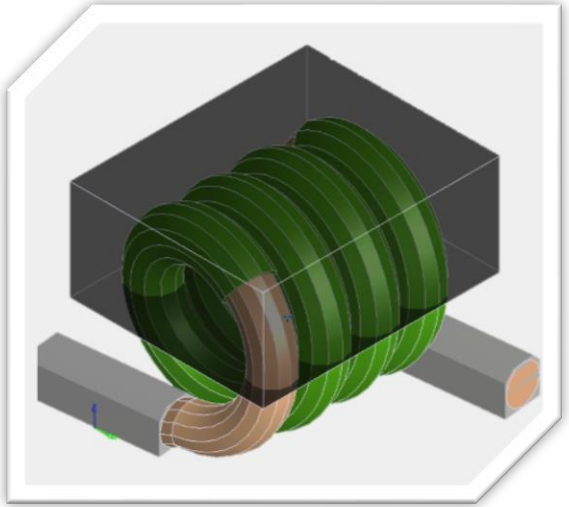

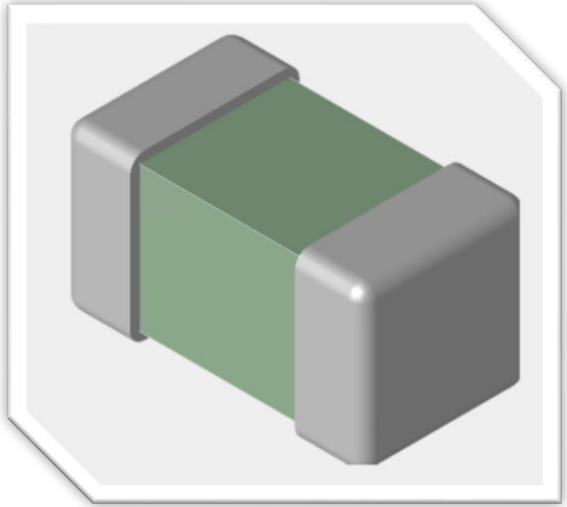

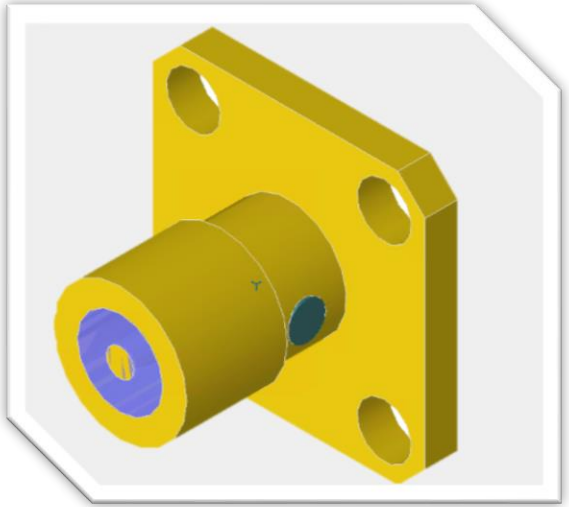

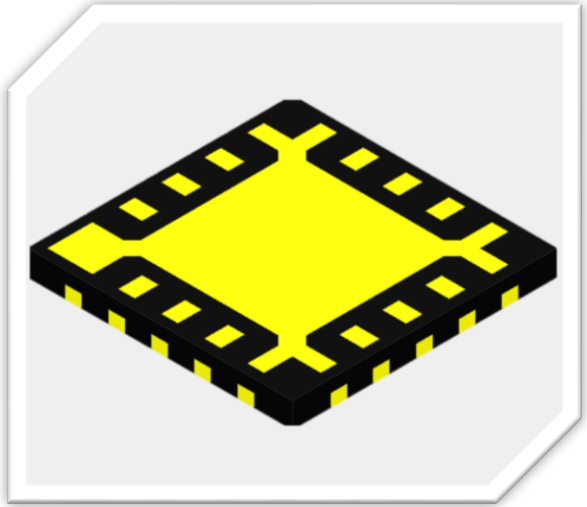

Modelithics currently supports **Ansys HFSS™** and is expanding support of 3D Simulators to: **Keysight RF Pro/EM Pro** and **Cadence® Clarity™**

A sample offering of 3D models is under development for RFPro and Clarity.

Stay tuned for the latest developments!

Modelithics Datasheets

- Model Information Datasheets are a **significant advantage** of our models.
- Key information about model development (frequency range, substrate, test fixture information, etc.) are described in the Model Information Datasheet.

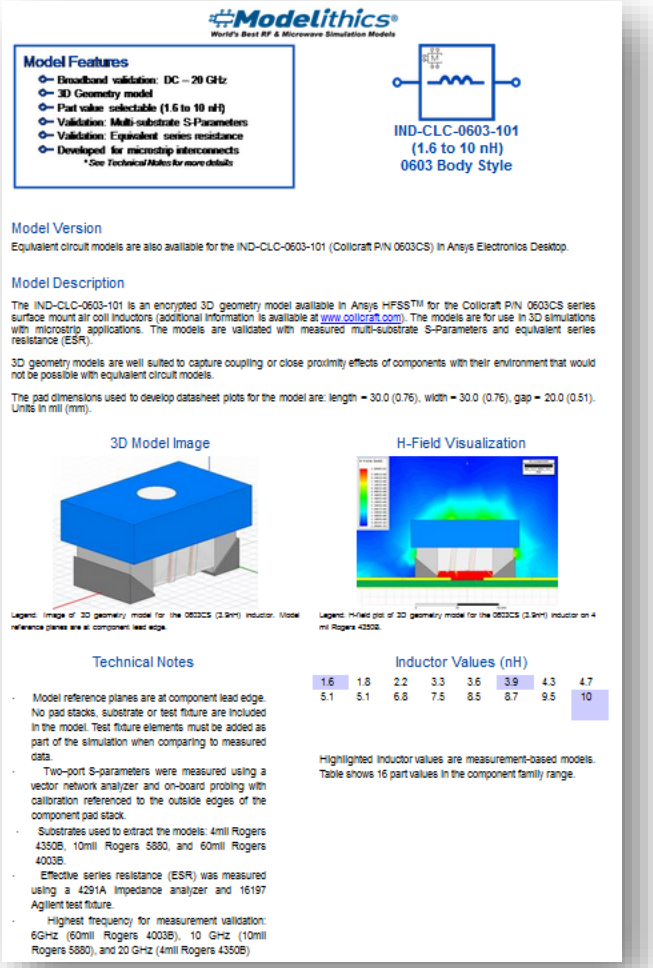

Modelithics®
World's Best RF & Microwave Simulation Models

Model Features
- Broadband validation: DC – 20 GHz
- 3D Geometry model
- Part value selectable (1.6 to 10 nH)
- Validation: Multi-substrate S-Parameters
- Validation: Equivalent series resistance
- Developed for microstrip interconnects

*See Technical Notes for more details

IND-CLC-0603-101
(1.6 to 10 nH)
0603 Body Style

Model Version

Equivalent circuit models are also available for the IND-CLC-0603-101 (Coilcraft P/N 0603CS) in Ansys Electronics Desktop.

Model Description

The IND-CLC-0603-101 is an encrypted 3D geometry model available in Ansys HFSS™ for the Coilcraft P/N 0603CS series surface mount air coil inductors (additional information is available at www.coilcraft.com). The models are for use in 3D simulations with microstrip applications. The models are validated with measured multi-substrate S-Parameters and equivalent series resistance (ESR).

3D geometry models are well suited to capture coupling or close proximity effects of components with their environment that would not be possible with equivalent circuit models.

The pad dimensions used to develop datasheet plots for the model are: length = 30.0 (0.76), width = 30.0 (0.76), gap = 20.0 (0.51). Units in mil (mm).

3D Model Image

Legend: Image of 3D geometry model for the 0603CS (3.9nH) inductor. Model reference planes are at component lead edge.

H-Field Visualization

Legend: H-field plot of 3D geometry model for the 0603CS (3.9nH) inductor on 4 mil Rogers 4350B.

Technical Notes

- Model reference planes are at component lead edge. No pad stacks, substrate or test fixture are included in the model. Test fixture elements must be added as part of the simulation when comparing to measured data.
- Two-port S-parameters were measured using a vector network analyzer and on-board probing with calibration referenced to the outside edges of the component pad stack.
- Substrates used to extract the models: 4mil Rogers 4350B, 10mil Rogers 5880, and 60mil Rogers 4003B.
- Effective series resistance (ESR) was measured using a 4291A Impedance analyzer and 16197 Agilent test fixture.
- Highest frequency for measurement validation: 6GHz (60mil Rogers 4003B), 10 GHz (10mil Rogers 5880), and 20 GHz (4mil Rogers 4350B)

Inductor Values (nH)

1.6	1.8	2.2	3.3	3.6	3.9	4.3	4.7
5.1	5.1	6.8	7.5	8.5	8.7	9.5	10

Highlighted Inductor values are measurement-based models. Table shows 16 part values in the component family range.

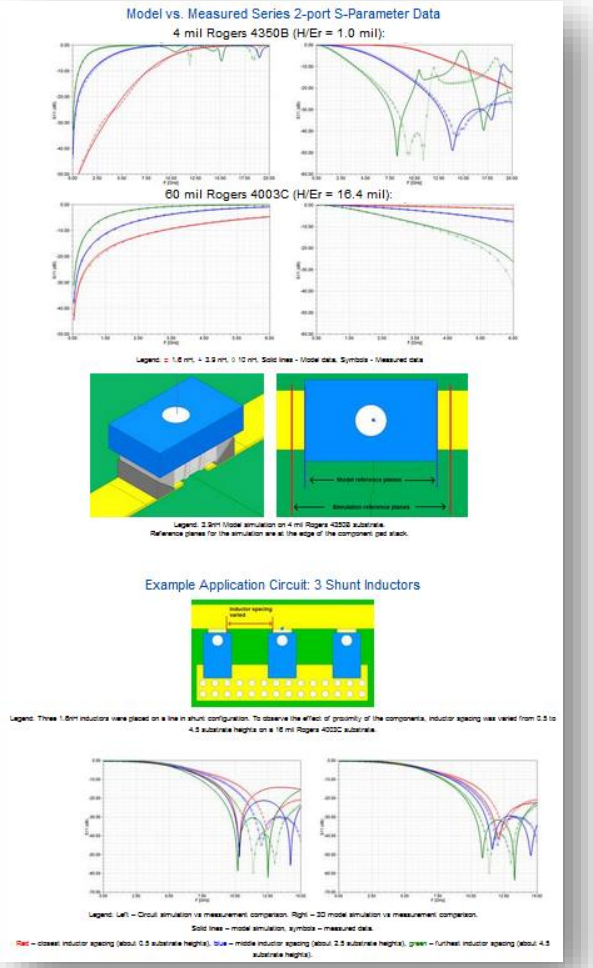

Model vs. Measured Series 2-port S-Parameter Data

4 mil Rogers 4350B (H/Er = 1.0 mil):

60 mil Rogers 4003C (H/Er = 16.4 mil):

Legend: ▫ 1.6 nH, + 3.9 nH, ◇ 10 nH, Solid lines - Model data, Symbols - Measured data

Legend: 3.9nH Model simulation on 4 mil Rogers 4350B substrate.
Reference planes for the simulation are at the edge of the component pad stack.

Example Application Circuit: 3 Shunt Inductors

Legend: Three 1.6nH inductors were placed on a line in shunt configuration. To observe the effect of proximity of the components, inductor spacing was varied from 0.5 to 4.5 substrate heights on a 16 mil Rogers 4003C substrate.

Legend: Left – Circuit simulation vs measurement comparison, Right – 3D model simulation vs measurement comparison.
Solid lines – model simulation, symbols – measured data.
Red – closest inductor spacing (about 0.5 substrate heights), blue – middle inductor spacing (about 2.5 substrate heights), green – furthest inductor spacing (about 4.5 substrate heights).

3D Model Encryption

- Encryption is a key feature of all Modelithics 3D Models.
- Enables us to hide proprietary geometry and material information
- Upper right corner will display a model information dialogue box when using an encrypted model

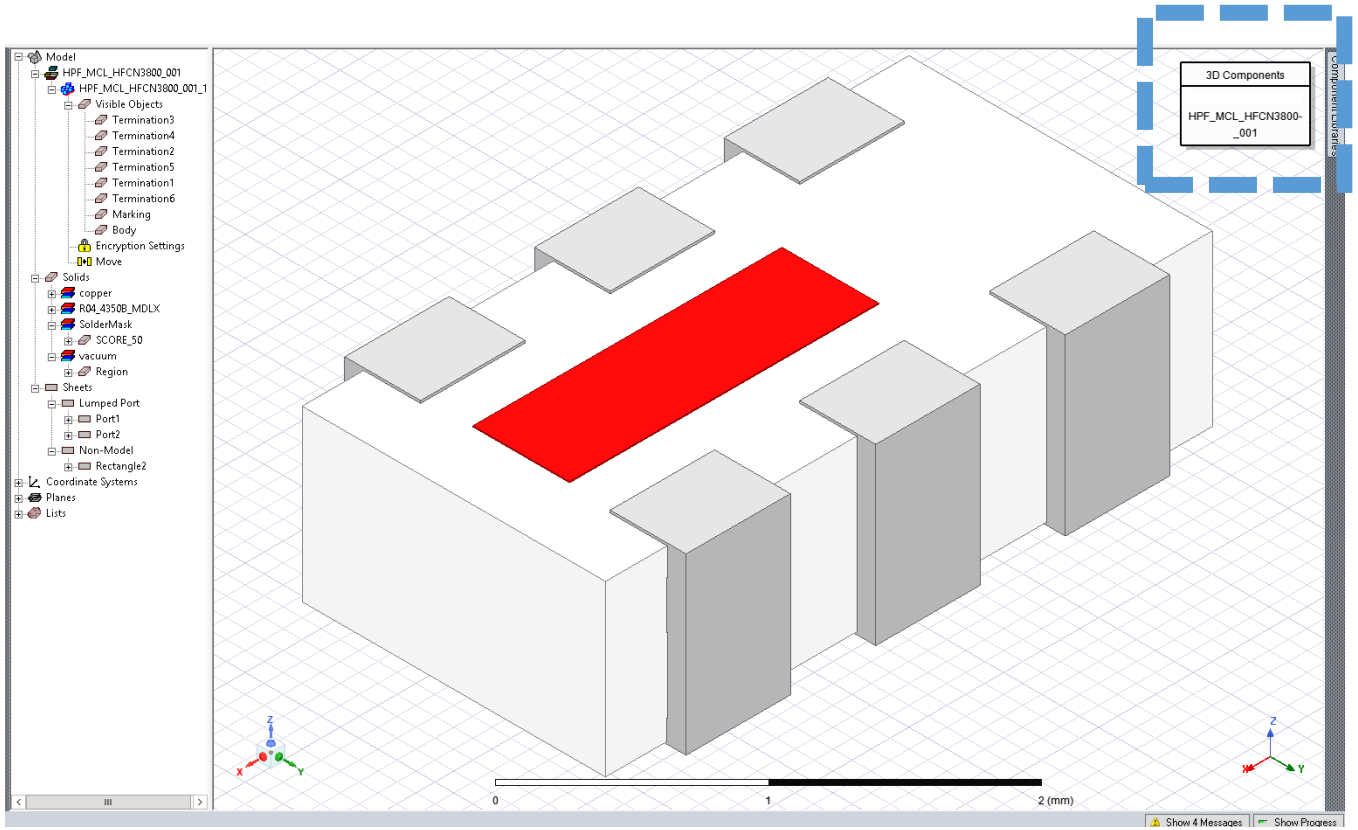

Modelithics 3D Brick Models™

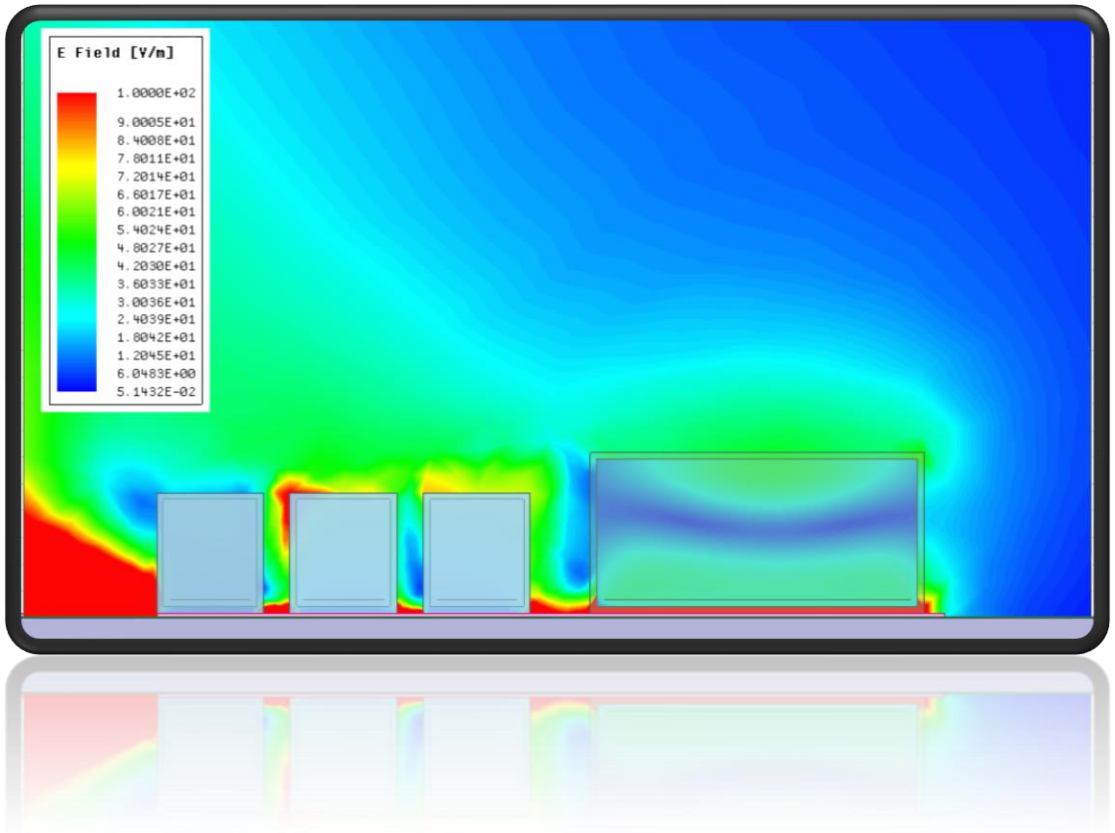

- For capacitors, a 3D model can require a very fine mesh for accurate simulation meaning long simulation times and increased computational resources.
- Obtaining the proprietary internal details from manufacturers can be a challenge.
- As a solution for designers, Modelithics now offers **3D Brick Models**, a 3D co-simulation approach for capacitors, as part of the Modelithics COMPLETE+3D Library.

What are 3D Brick Models?

- 3D Brick Models are stand-in components for capacitors in the 3D EM simulation that allow the designer to catch component coupling effects.
- 3D Brick Models are then combined with Modelithics' CLR Library™ models in the circuit simulator to create a 3D co-simulation to represent the full design.

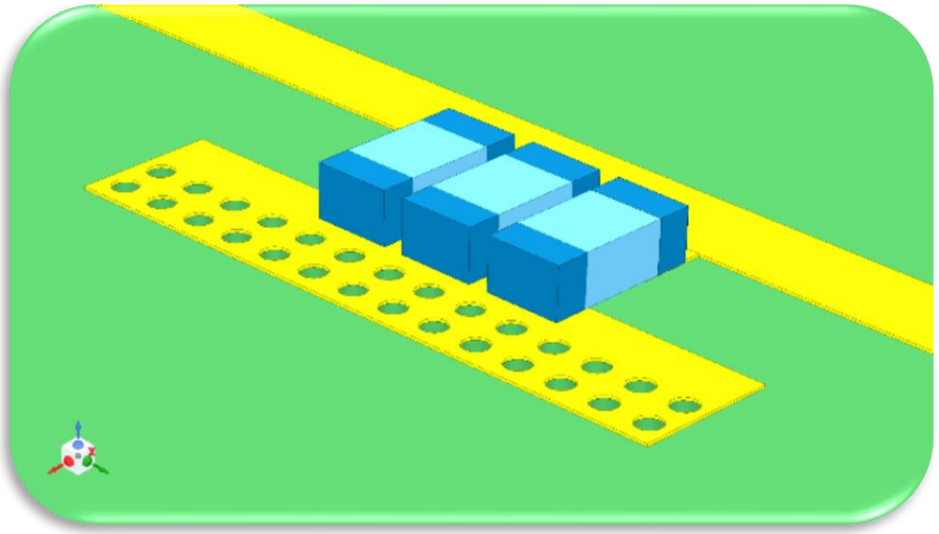

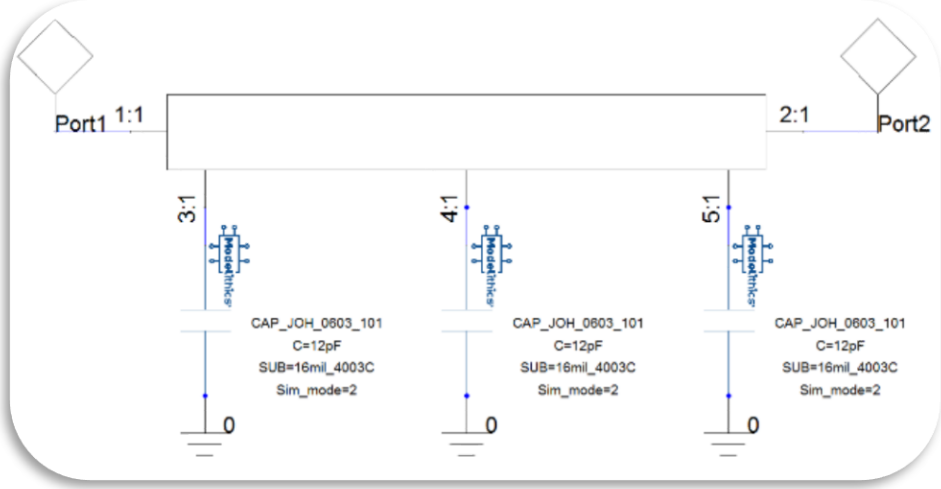

Brick Model Example Filter

Lumped element bandpass filter on 4 mil Rogers 4350B using TDK MHQ1005P and Passive Plus 0402N part families. Center frequency: 2.2 GHz

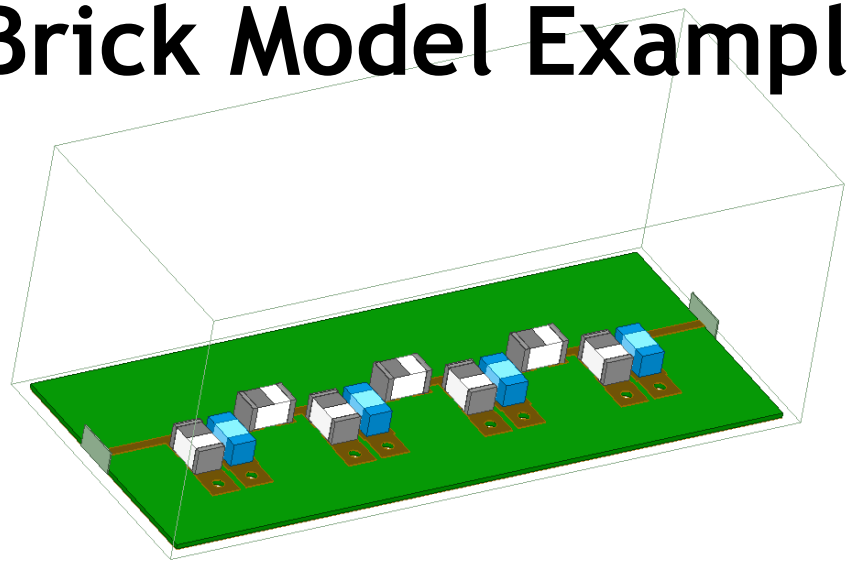

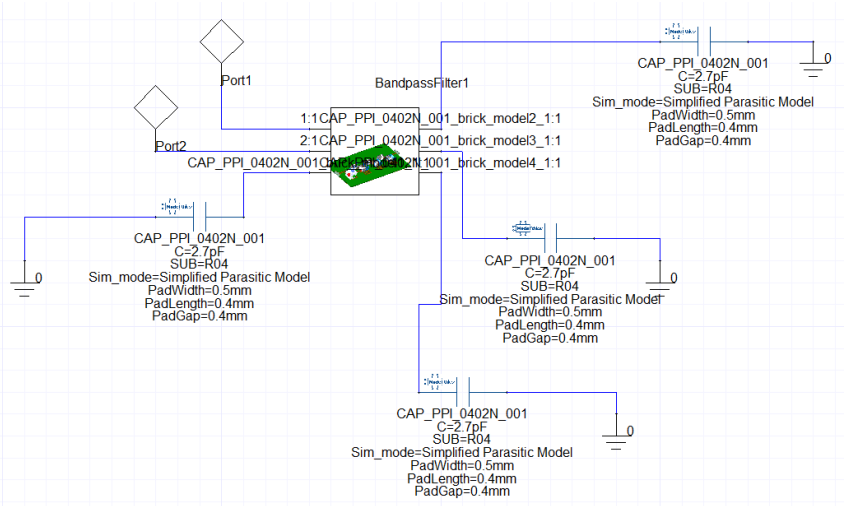

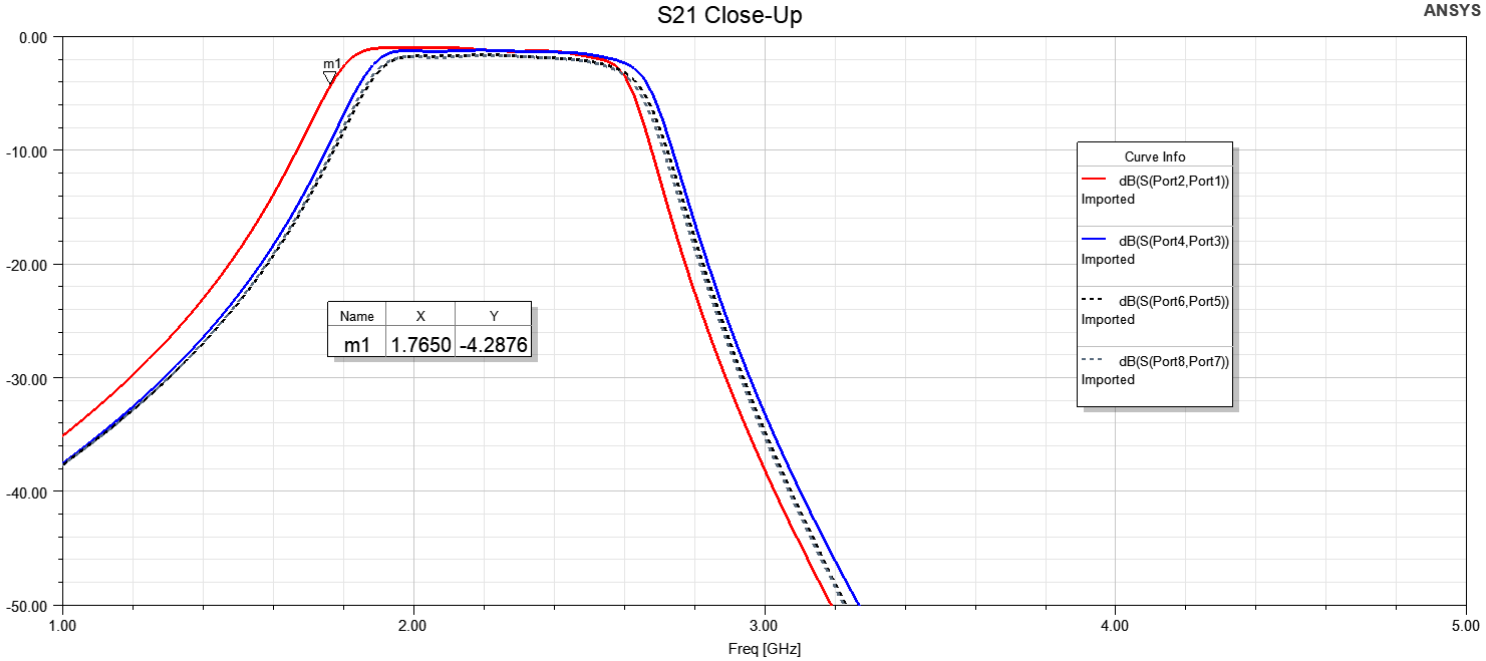

Red= Planar EM Co-simulation
Blue = 3D Co-simulation with Brick models
Black = Measurement data

See Application Note 082 for more details on this filter design

How To Use a 3D Brick Model

- Drop the Brick Model component from the HFSS 3D Component Library palette into the design layout in HFSS.

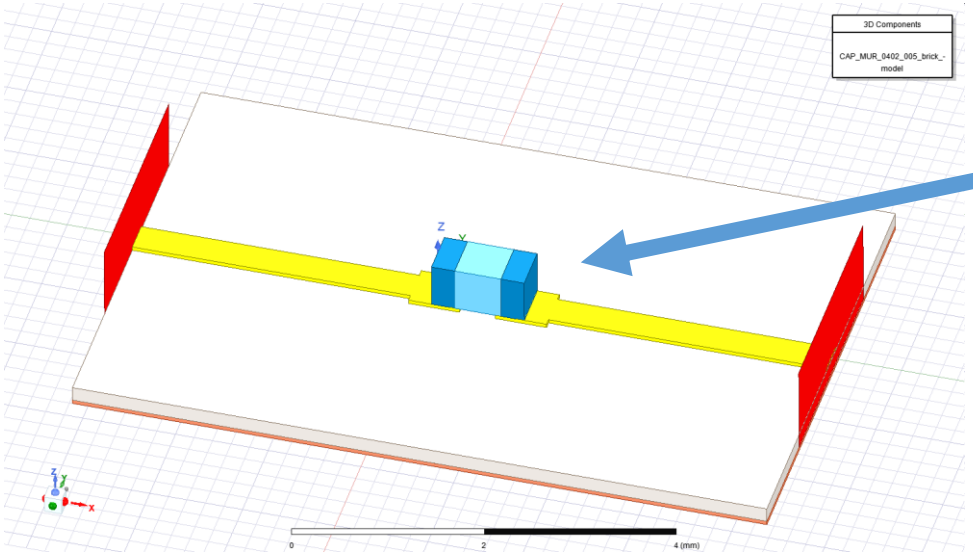

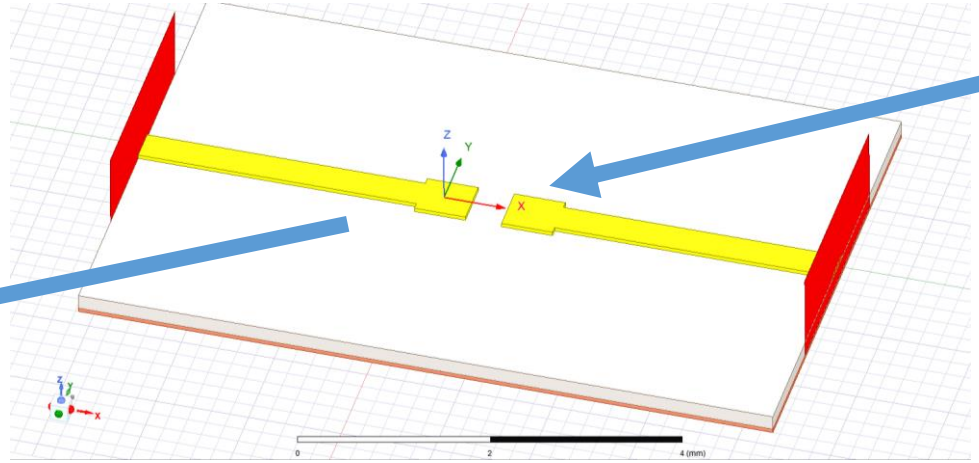

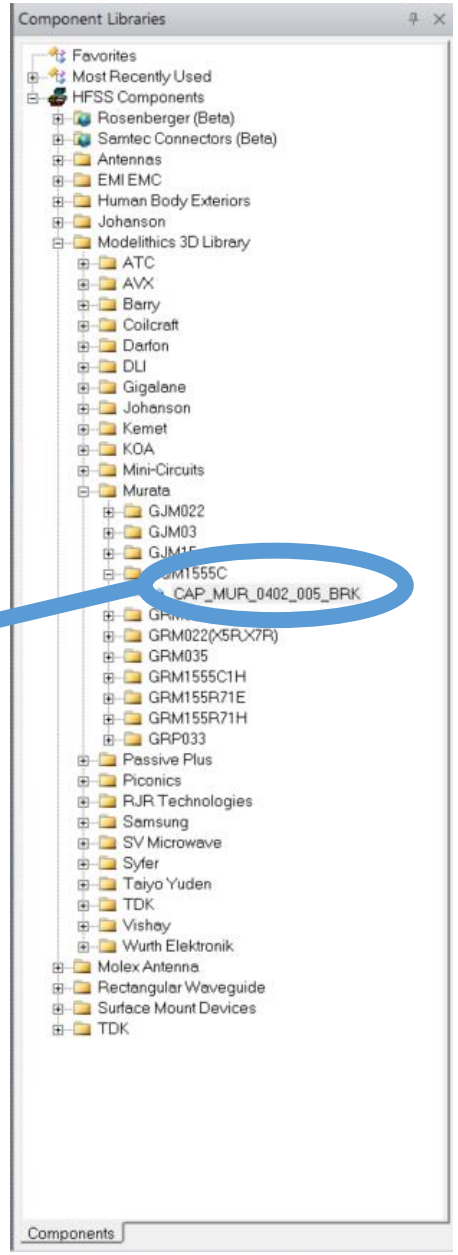

How to Use 3D Brick Models

- Once the 3D EM simulation is complete, bring the data into the circuit simulator by creating a HFSS Dynamic Link.
- Right-click on the circuit design in the Project Tree and select Add Subcircuit > Add HFSS Link.
- In the dialog box, there will be additional options for the dynamic link. Choose the desired frequency sweep and click “OK”.

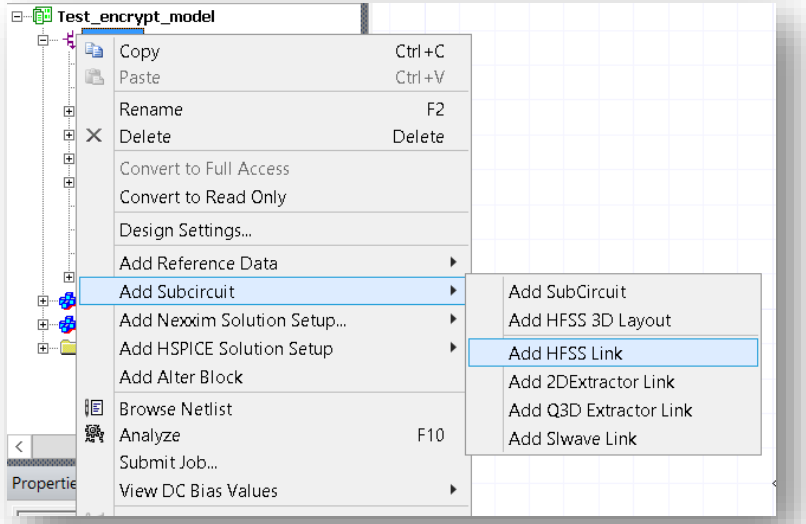

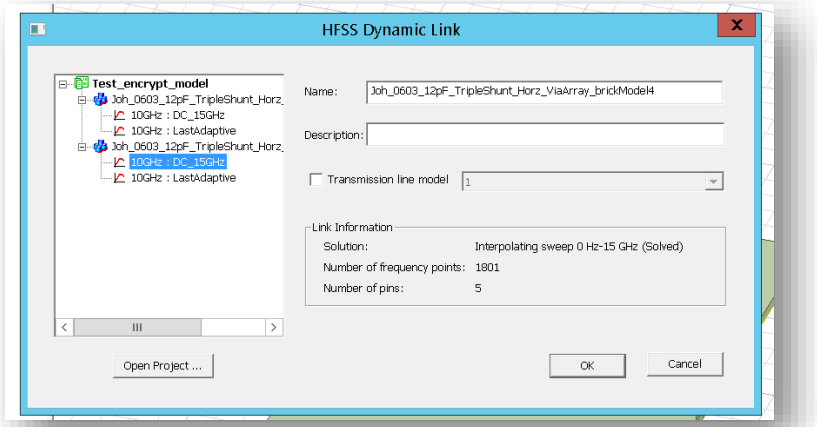

How to Use 3D Brick Models

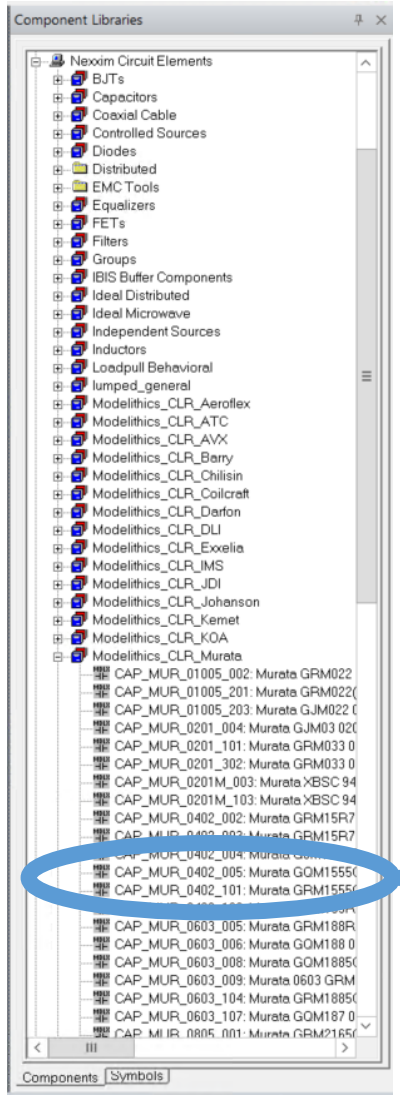

- Once the HFSS Dynamic Link is in the circuit design, add the Modelithics capacitor model to represent the capacitor internals.
- Drag-and-drop the appropriate Modelithics capacitor model from the Component Library palette.
- Connect the Modelithics capacitor model to the appropriate port in the HFSS Dynamic Link.

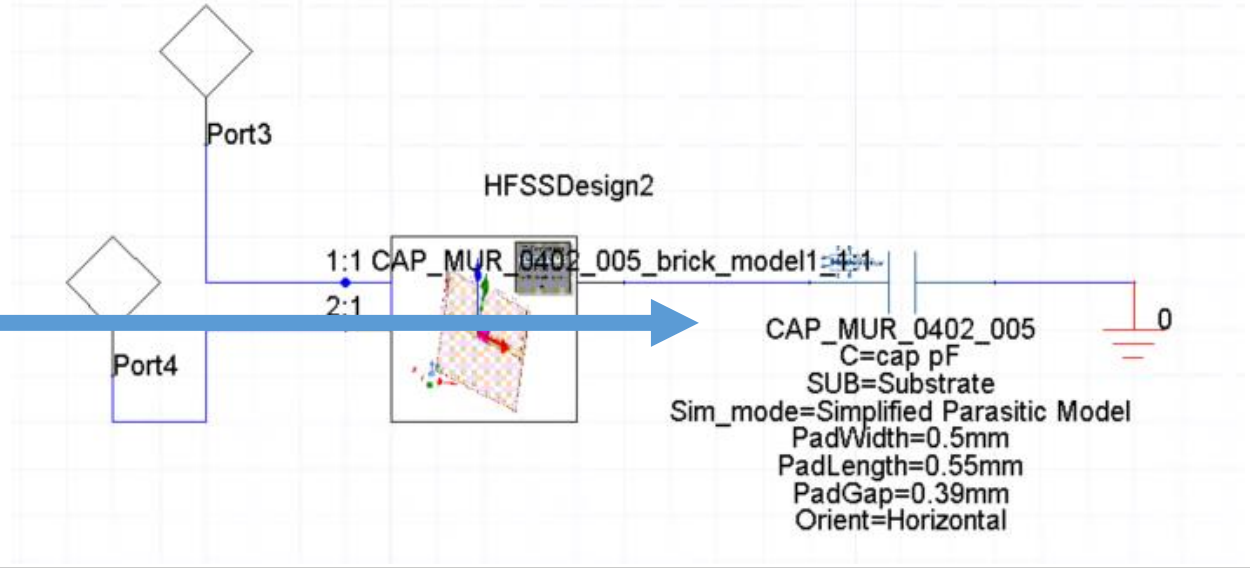

How to Use 3D Brick Models

- Configure the Modelithics capacitor model to use the correct substrate, desired part value, and set Sim_mode=3 (Simplified Parasitic Model).
- The Modelithics model will now account for the capacitor's internal parasitic effects that were omitted from the 3D simulation.

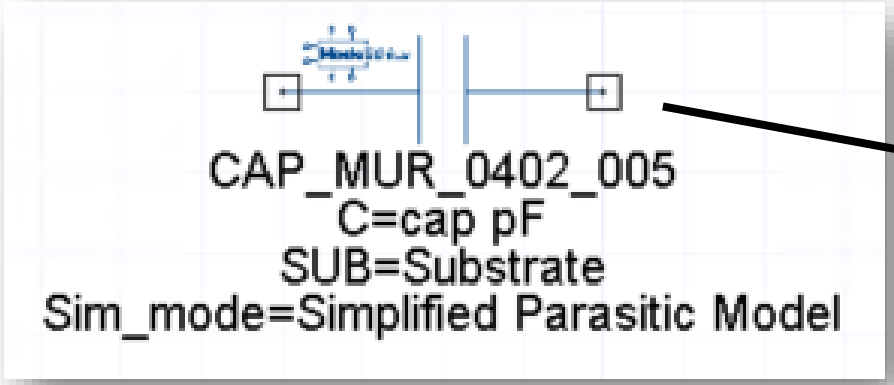

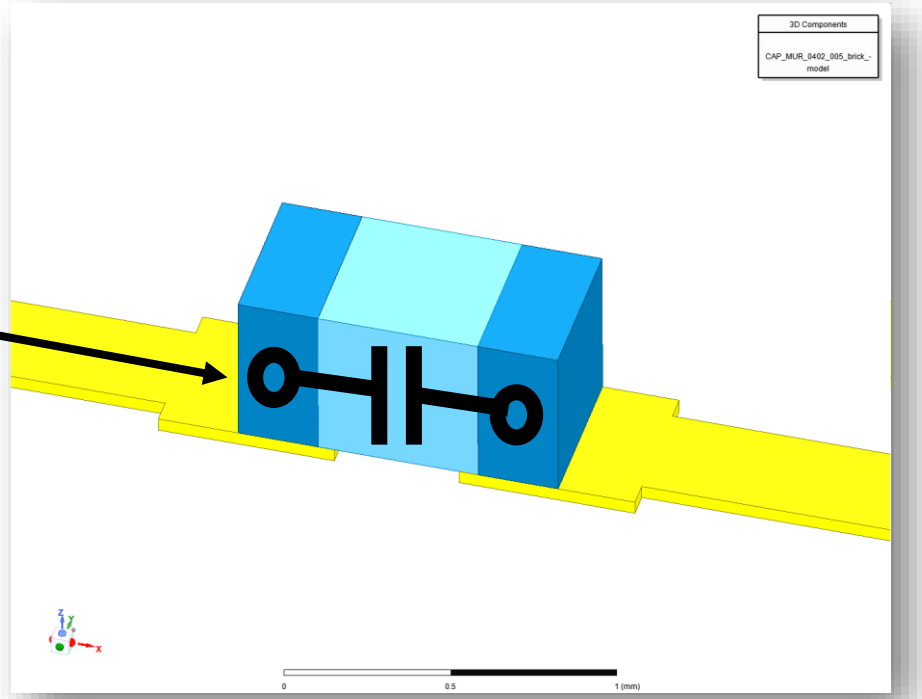

Advantage of Using 3D Brick Models

- 3D Brick Models provide good results when compared to measured data and allow the designer to capture component coupling between capacitors and their environment.
- This method only requires a single run of the 3D simulation, and the capacitance value can be adjusted after the fact as a part of the circuit simulation.
- Because of this, the 3D co-simulation method used by Brick Models lends itself to statistical analyses and tuning/optimization to see the effect of part value on circuit performance.

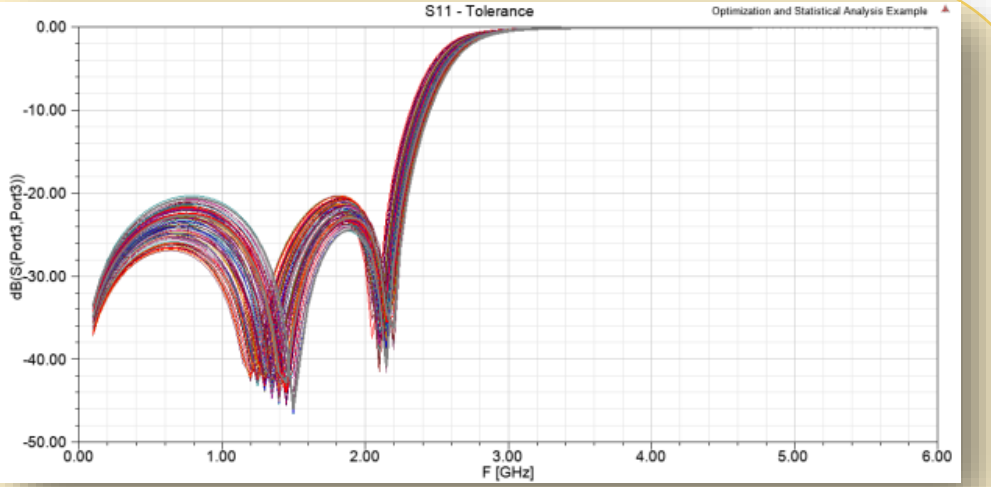

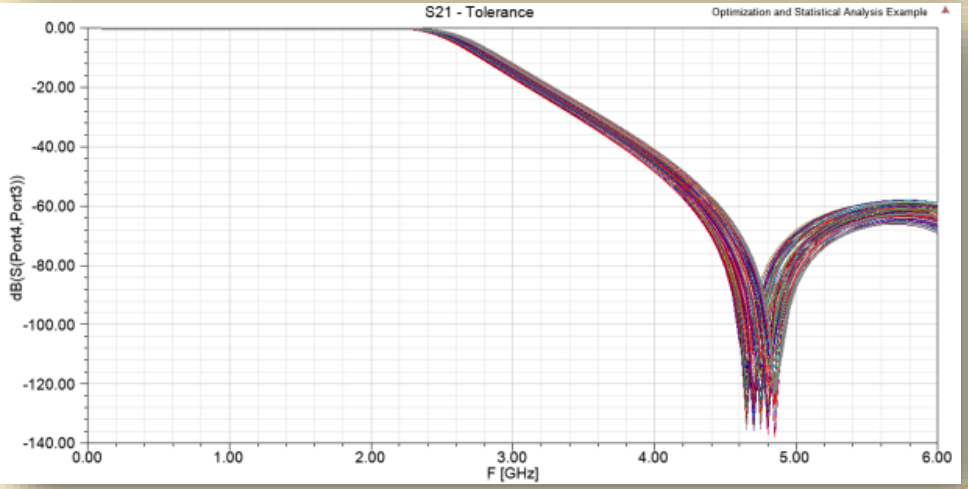

Conclusion

- For more information on Modelithics 3D Brick Models, see App Note 78: Using 3D Brick Models for Full-wave EM/Circuit Model Co-simulation of MLCC Capacitors in Ansys HFSS
- The 3D Brick Models available in the Modelithics COMPLETE+3D Library provide a powerful solution for designers seeking to simulate capacitors in 3D EM simulations to capture coupling effects.
- They are simple to use, simulate quickly, and give accurate simulation results when combined with Modelithics capacitor models.

Modelithics®

The World's Best RF & Microwave Simulation Models

Please let us know if you have any questions or if we may be of assistance.
Web: www.modelithics.com Email: support@modelithics.com

Thank You!